USB-C Connector

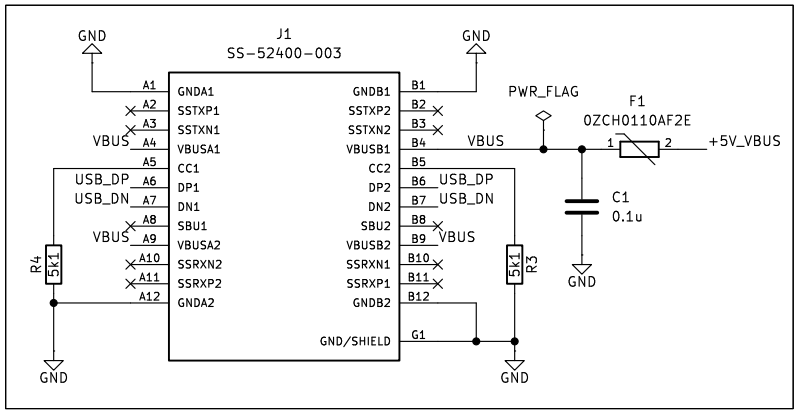

Low Drop Out (LDO) Voltage Regulator

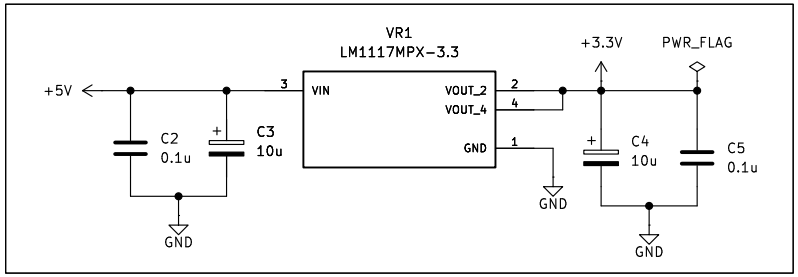

Lipo Battery Charger

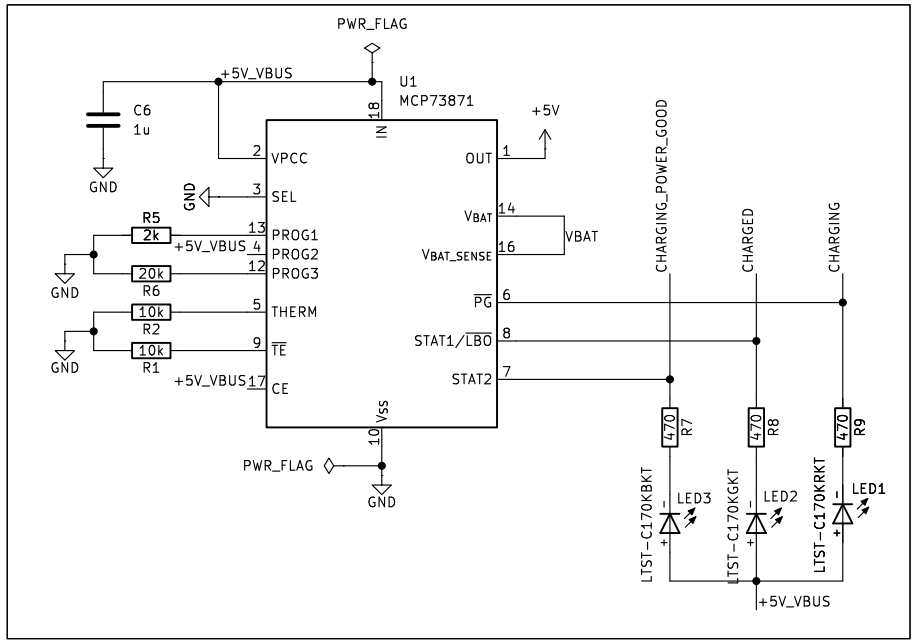

Battery JST Connector

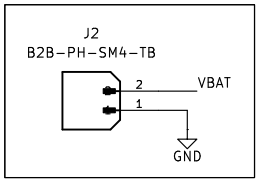

ESP32-C3-02

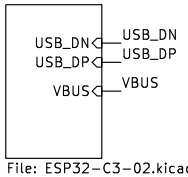

File: ESP32-C3-02.kicad_sch

Power Indicator LED

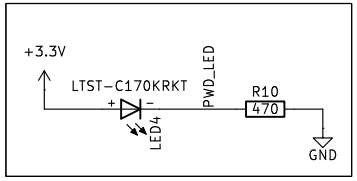

Sheet: /
File: ESP32 demo project.kicad_sch

Title: ESP32 Sensor Board – Root

Size: A4	Date: 2026-03-21	Rev:
KiCad E.D.A. 9.0.0		Id: 1/4

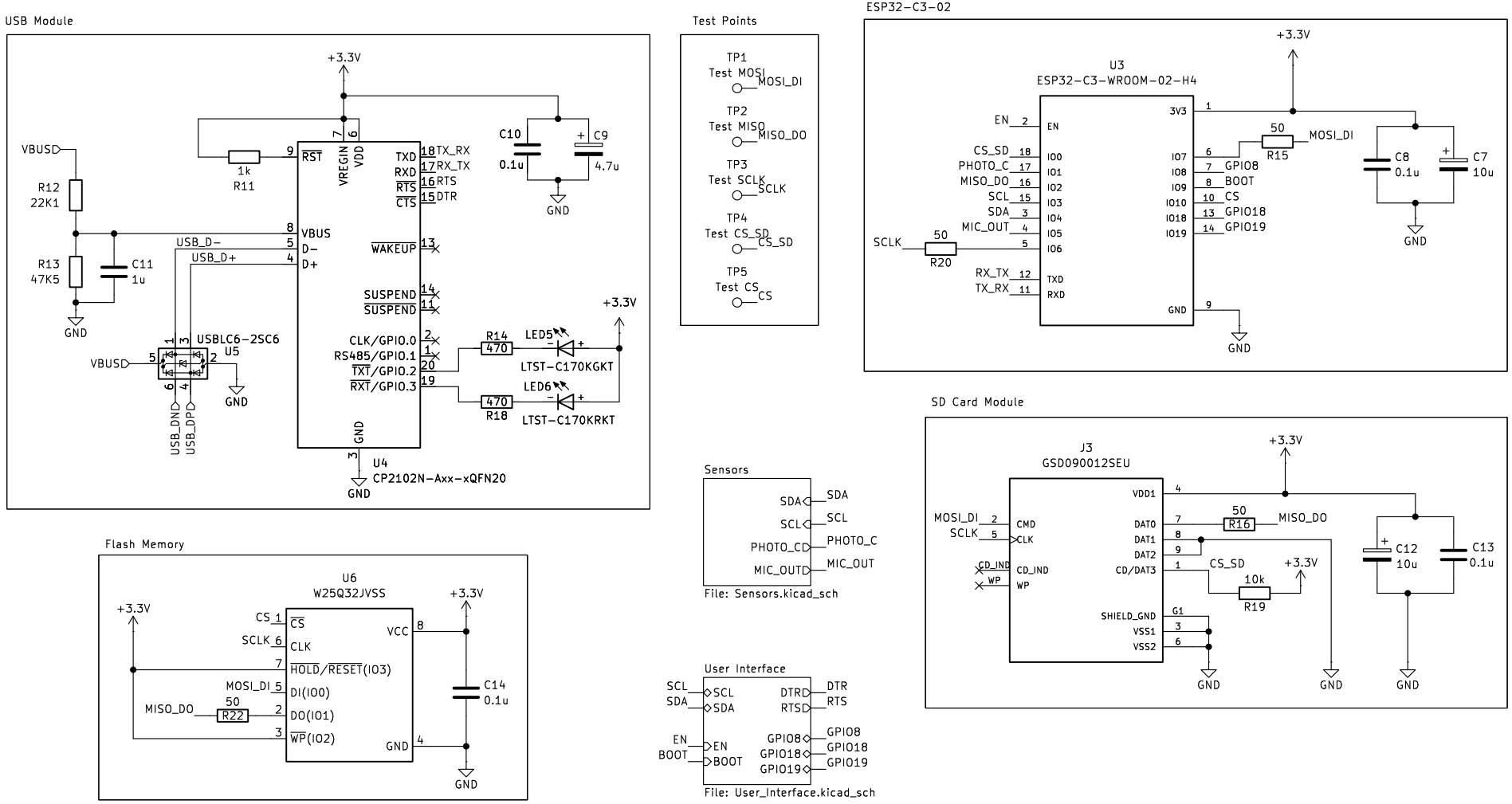

Sheet: /ESP32-C3-02/
File: ESP32-C3-02.kicad_sch

Title: ESP32 C3, USB, and Flash Memory

Size: A4	Date: 2026-03-25	Rev:
KiCad E.D.A. 9.0.0		Id: 2/4

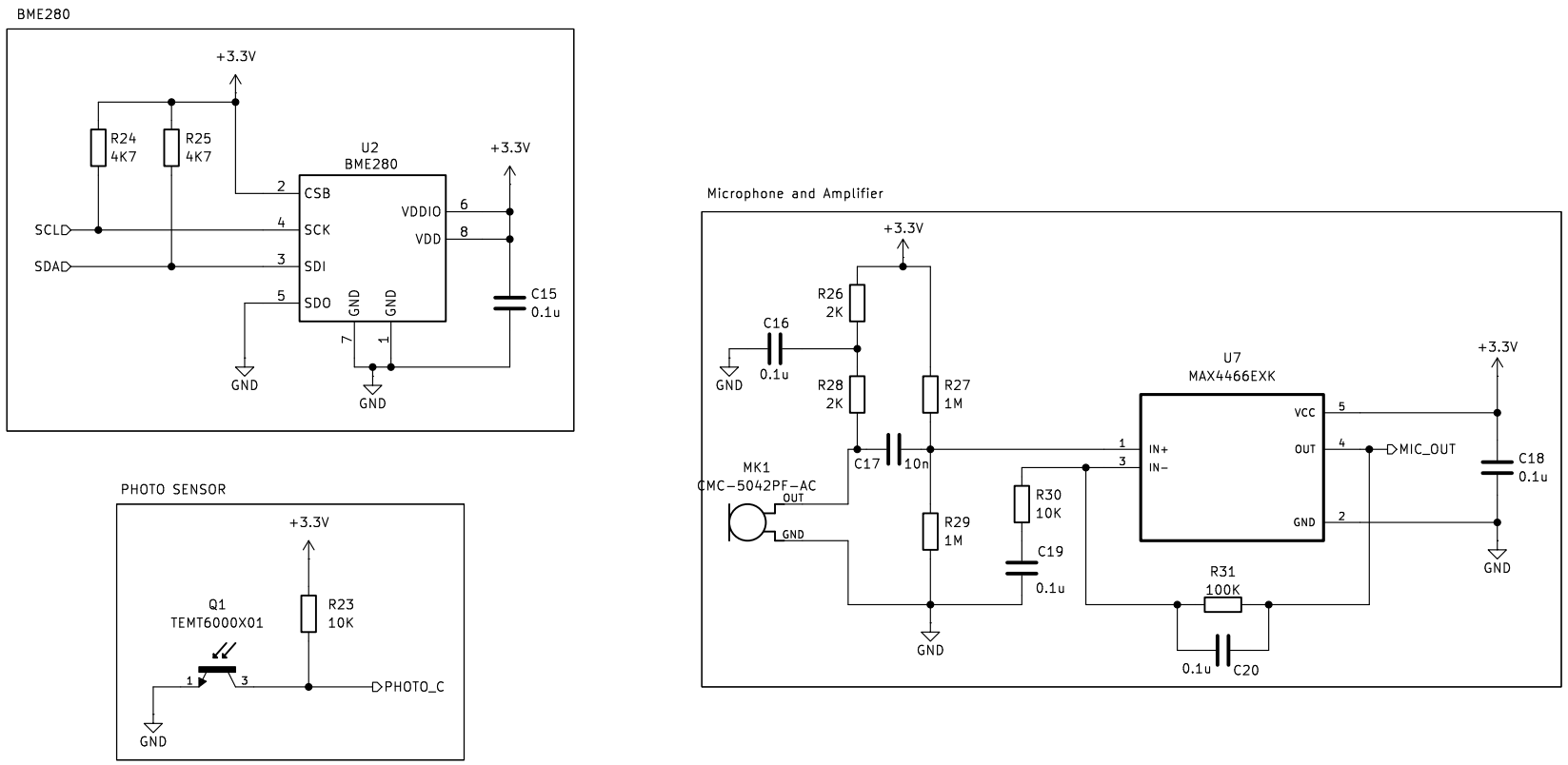

Sheet: /ESP32-C3-02/Sensors/
File: Sensors.kicad_sch

Title:

Size: A4	Date:	**Rev:**
KiCad E.D.A. 9.0.0		Id: 3/4

OLED Display Connector (I2C)

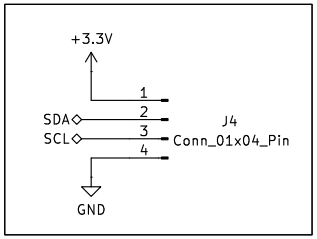

Breakout For Remaining Pins

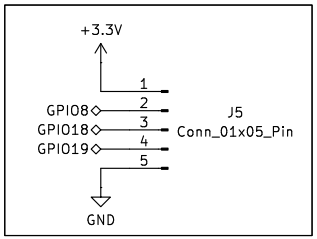

RESET and BOOT Buttons

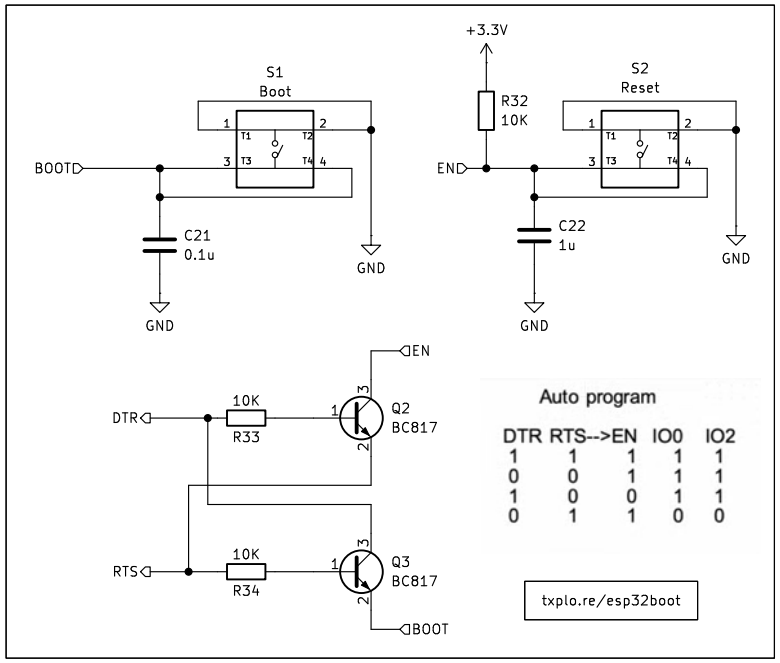

Sheet: /ESP32-C3-02/User Interface/
File: User_Interface.kicad_sch

Title:

Size: A4	Date:	**Rev:**
KiCad E.D.A. 9.0.0		Id: 4/4